Cassette® C2 - Electric

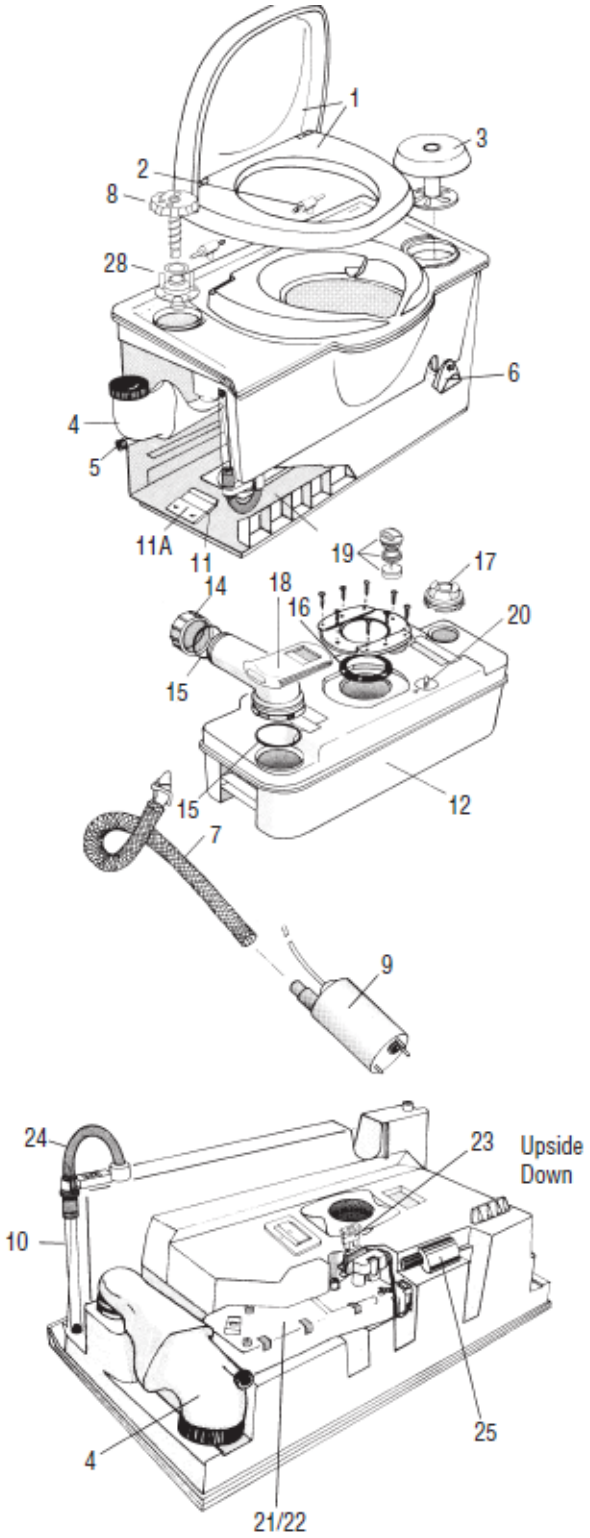

NO.	PART NO.	DESCRIPTION
1	1619462	SEAT AND COVER, WHITE
	33154	*SUPERSEDED BY 1619462*
2	*N/A*	*HINGE POST AND PIN*
3	*N/A*	*TISSUE HOLDER, WHITE*
4	*N/A*	*WATER FILL FUNNEL*
5	1638578	DRAIN CAP FOR WATER FILL FUNNEL
	16385	*SUPERSEDED BY 1638578*
	33337	*SUPERSEDED BY 16385*
6	*N/A*	*LEVEL INDICATOR, WHITE*
7	*N/A*	*FLUSH TUBE*
8	*1637762*	*FLUSH KNOB*
	33157	*SUPERSEDED BY 1637762*
9	29027	PUMP
	33368	*SUPERSEDED BY 29027*
10	*N/A*	*SIGHT TUBE*
11	*16169*	*SPRING FOR CLIP RETAINER*
11A	*N/A*	*CLIP AND CLIP RETAINER, YELLOW*
12	20063874	HOLDING TANK COMPLETE (RIGHT-HAND)
	33205	*SUPERSEDED BY 20063874*
	20063974	HOLDING TANK COMPLETE (LEFT-HAND)
	33206	*SUPERSEDED BY 20063974*
14	1638478	DUMP CAP
	33160	*SUPERSEDED BY 1638478*
15	16195	CAP AND SPOUT SEALS (QTY -2)
	33333	*SUPERSEDED BY 16195*
16	16175*	LIP SEAL (PRE-6/15/00)
	33331	*SUPERSEDED BY 16175*
	23721	LIP SEAL (POST-6/15/00)
	33361	*SUPERSEDED BY 23721*
17	*N/A*	*VENT PLUG*
18	*2133374*	*SLIDING COVER*
	33203	*SUPERSEDED 2133374*
19	2372274*	AUTOMATIC VENT
	33210	*SUPERSEDED BY 2372274*
20	*N/A*	*BLADE OPENER*
21	*1637974*	*MECHANISM ASSEMBLY, DARK GRAY*
	33158	*SUPERSEDED BY 1637974*
22	*33340*	*WIRING HARNESS*

Cassette® C2 - Electric

Parts List Continued

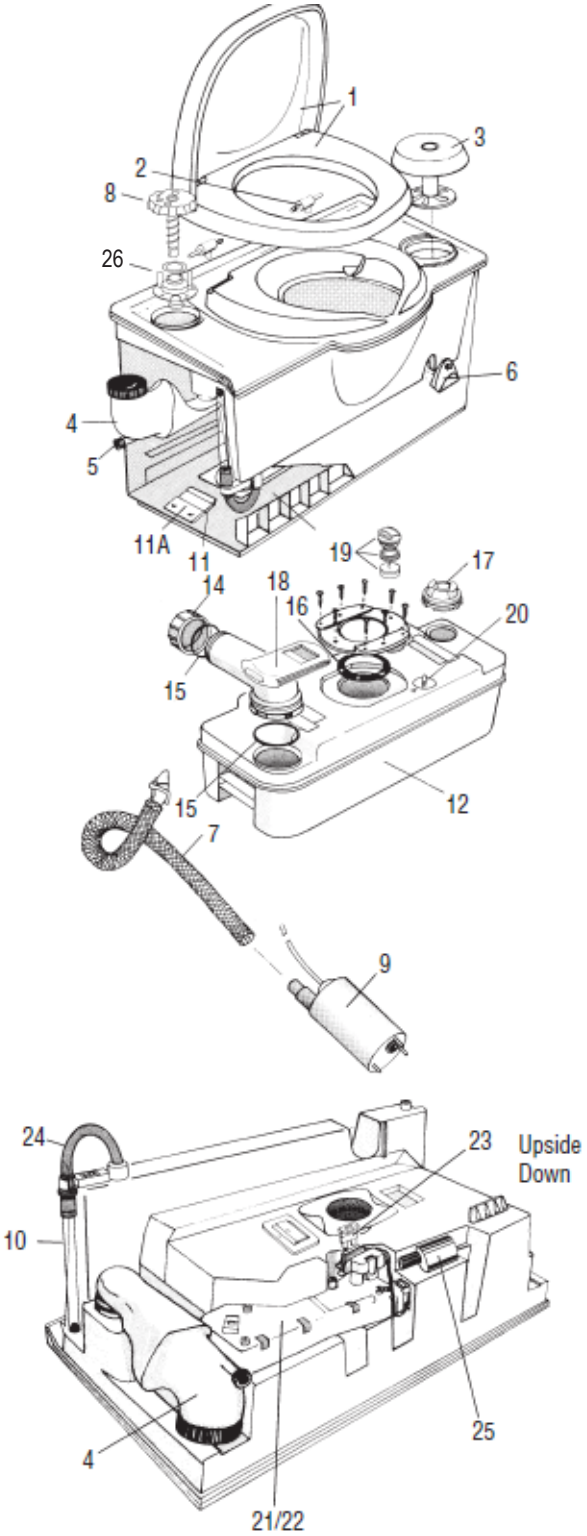

NO.	PART NO.	DESCRIPTION
23	16451	3 AMP FUSE
	33342	*SUPERSEDED BY 16451*
24	*N/A*	*DRAIN TUBE (RIGHT-HAND)*
	N/A	*DRAIN TUBE (LEFT-HAND)*
25	*N/A*	*FLASHER*
26	*N/A*	*STOP RETAINER*

NOT SHOWN	
PART NO.	**DESCRIPTION**
20107	*SWITCH*
33353	*SUPERSEDED BY 20107*
16202	*MOUNTING BRACKET*

Not available

* Limited Availability