Thetford Corp.
Replacement Parts List

17 Inch Slide-In Cooktop and Slide-In Oven

Oven Model XR17200

Cooktop Model XC200

PART NO. 638487
NORCOLD 2/3/2022

OVEN - XR17200

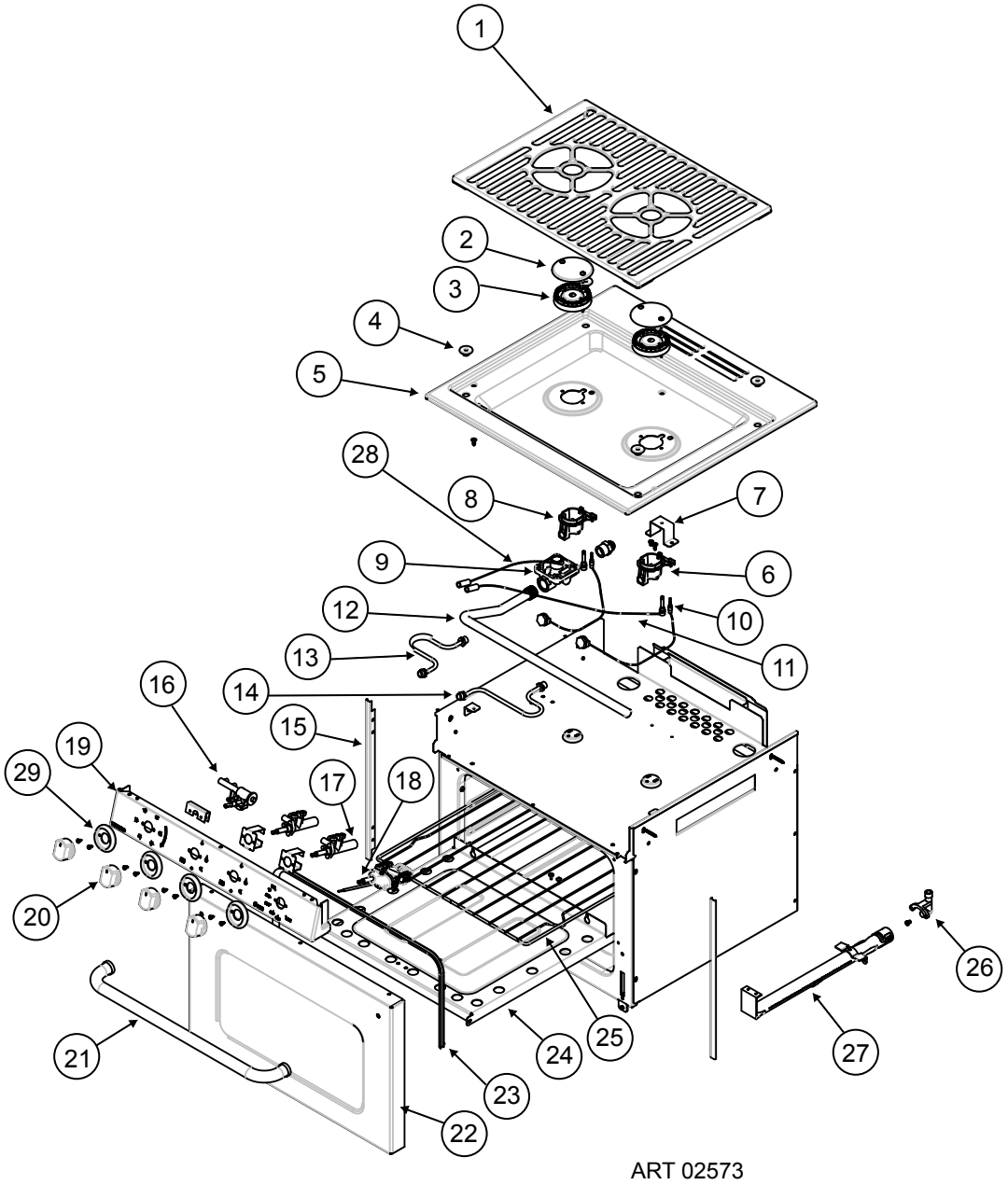

OVEN - XR17200

NO.	PART #	PART DESCRIPTION	XR17200 OVEN
1	638424	BURNER GRATE	X
2	638425	BURNER CAP	X
3	638426	BURNER BODY (USE 639445)	X
	639445	KIT SERVICE BURNER BODY	X
4	638427	GROMMET. BURNER GRATE	X
5	638428	TOP COVER (USE 639447)	X
	639447	KIT SERVICE TOP COVER	X
6	638554	KIT, ORIFICE, HIGH FLOW (USE 639449)	X
	639449	KIT SERV ORIFICE	X
7	638431	BRACKET, TOP COVER	X
8	638553	KIT, ORIFICE (USE 639451)	X
	639451	KIT SERVICE ORIFICE	X
9	638434	REGULATOR (USE 639455)	X
	639455	KIT SERVICE REGULATOR	X
10	638435	ELECTRODE,FLAME SENSE-COOKTOP (USE 639457)	X
	639457	KIT SERVICE FLAME SENSE	X
NS	638436	ELECTRODE,FLAME SENSE-OVEN (USE 639459)	X
	639459	KIT SERVICE OVEN FLAME SENSE ELECTRODE	X
11	638437	ELECTRODE. SPARK-COOKTOP- RH (USE 639461)	X
	639461	KIT SERVICE SPARK ELECTRODE RH	X
NS	638438	ELECTRODE. SPARK-OVEN	X
12	638439	TUBE, MANIFOLD (USE 639465)	X
	639465	KIT SERVICE MANIFOLD TUBE	X
13	638440	BURNER TUBE, LH (USE 639468)	X
	639468	KIT SERVICE BURNER TUBE LH	X
14	638441	BURNER TUBE RH (USE 639469)	X
	639469	KIT SERVICE BURNER TUBE RH	X
NS	638442	BURNER TUBE, OVEN (USE 639471)	X
	639471	KIT SERVICE OVEN BURNER TUBE	X
15	638443	SIDE TRIM	X
16	638444	IGNITOR, ROTARY	X
17	638445	VALVE, COOKTOP (USE 639475)	X
	639475	KIT SERVICE COOKTOP VALVE	X
18	638446	VALVE, OVEN (USE 639477)	X
	639477	KIT SERVICE OVEN VALVE	X
19	638447	COVER, CONTROL (USE 639480)	X
	639480	KIT SERVICE CONTROL COVER	X
20	638552	KIT KNOB AND BASE	X

OVEN - XR17200 CONTINUED

21	638451	KIT-HANDLE	X
22	638452	ASSEMBLY, DOOR (USE 639488)	X
	639488	KIT SERVICE OVEN DOOR	X
23	638453	GASKET (USE 639490)	X
	639490	KIT SERVICE DOOR GASKET	X
24	638454	OVEN BOTTOM TRAY	X
25	638455	RACK, OVEN	X
26	638555	KIT ORIFICE, OVEN (USE 639482)	X
	639482	KIT SERVICE OVEN ORIFICE	X
27	638457	ASSEMBLY, OVEN BURNER (USE 639484)	X
	639484	KIT SERVICE OVEN BURNER	X
28	637988	ELECTRODE, SPARK-LH (USE 639486)	X
	639486	KIT SERVICE SPARK ELECTRODE LH	X
29	639327	KIT,KNOB AND BASE, IGNITOR	X

PART IS NO LONGER AVAILABLE

NS = NOT SHOWN

COOKTOP - XC200

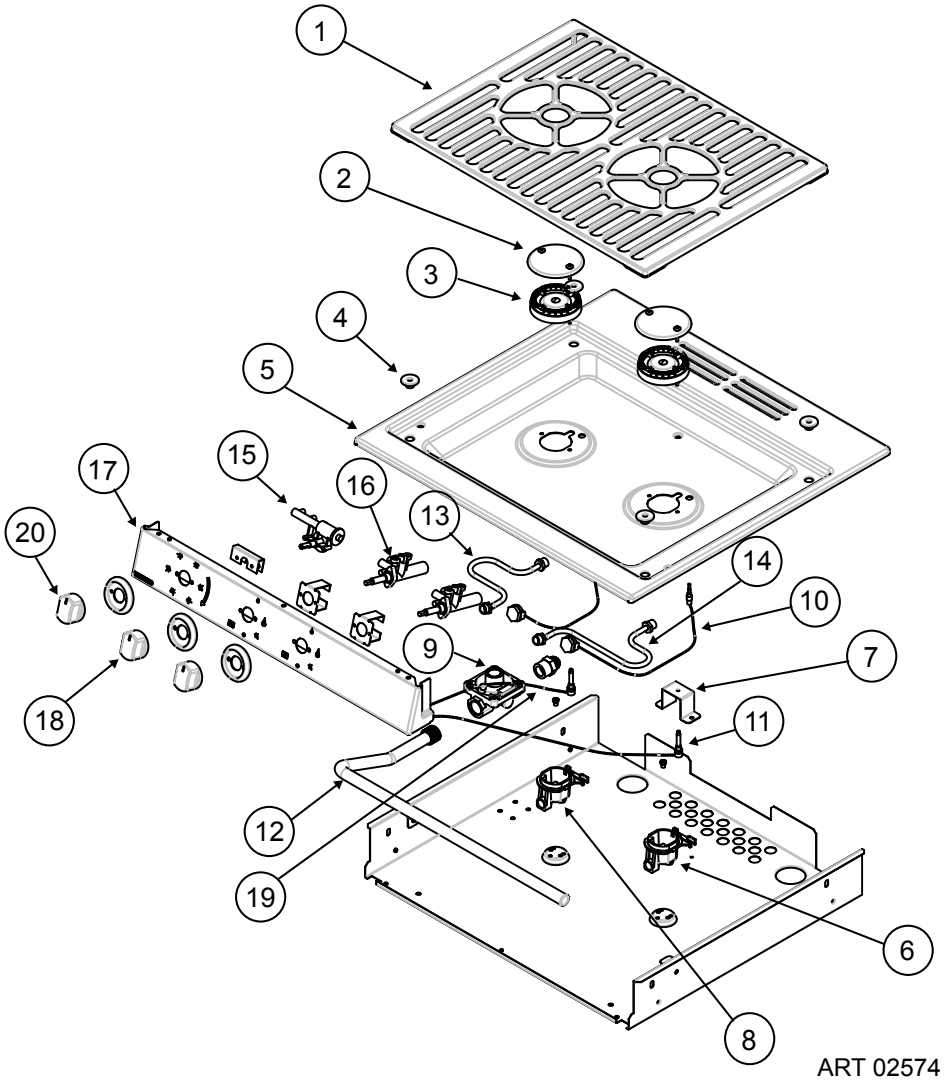

COOKTOP - XC200

NO.	PART #	PART DESCRIPTION	XC200 COOKTOP
1	638424	BURNER GRATE	X
2	638425	BURNER CAP	X
3	638426	BURNER BODY(USE 639445)	X
	639445	KIT SERVICE BURNER BODY	X
4	638427	GROMMET. BURNER GRATE	X
5	638428	TOP COVER (USE 639447)	X
	639447	KIT SERVICE TOP COVER	X
6	638554	KIT, ORIFICE, HIGH FLOW (USE 639449)	X
	639449	KIT SERV ORIFICE	X
7	638431	BRACKET, TOP COVER	X
8	638553	KIT, ORIFICE (USE 639451)	X
	639451	KIT SERVICE ORIFICE	X
9	638434	REGULATOR (USE 639455)	X
	639455	KIT SERVICE REGULATOR	X
10	638435	ELECTRODE,FLAME SENSE-COOKTOP (USE 639457)	X
	639457	KIT SERVICE FLAME SENSE	X
11	638437	ELECTRODE. SPARK-COOKTOP- RH (USE 639461)	X
	639461	KIT SERVICE SPARK ELECTRODE RH	X
12	638512	TUBE, MANIFOLD (USE 639466)	X
	639466	KIT SREVICE MANIFOLD TUBE	X
13	638440	BURNER TUBE, LH (USE 639468)	X
	639468	KIT SERVICE BURNER TUBE LH	X
14	638441	BURNER TUBE RH (USE 639469)	X
	639469	KIT SERVICE BURNER TUBE RH	X
15	638444	IGNITOR, ROTARY	X
16	638445	VALVE, COOKTOP (USE 638475)	X
	638475	KIT SERVICE COOKTOP VALVE	X
17	638448	COVER, CONTROL (USE 639479)	X
	639479	KIT SERVICE CONTROL COVER	X
18	638552	KIT KNOB AND BASE	X
19	637988	ELECTRODE, SPARK-LH (USE 639486)	X
	639486	KIT SERVICE SPARK ELECTRODE LH	X
20	639327	KIT, KNOB AND BASE IGNITOR	X

PART IS NO LONGER AVAILABLE

NS = NOT SHOWN