THETFORD
NORCOLD

TECMA · Porta Potti · Aqua MAX · bio · PROTECT ALL · TITAN · SANICON TURBO · POLAR

PRODUCT CATALOG

INDEX

TOILETS ----------3
- Permanent Toilets....4
- Cassette® Toilets....10
- Portable Toilets....11
- Accessories....12
- Dimensions....13

SANITATION SOLUTIONS ----------16
- Holding Tank Treatments....17
- Specialty Chemicals....20
- Toilet Tissue....21

RV CARE ----------22
- Exterior Cleaners....23
- Interior Cleaners....26
- Lubricants....27

EVACUATION ----------28
- Portable Waste Tanks....29
- Sewer Hoses & Supports....31
- Sewer Hose Accessories....32
- Powered Systems....33
- Powered System Accessories....34

POLAR® ELITE ----------35
- N20DC....36
- N15DC....37

POLAR® MAX ----------38
- 2118....39
- 1210....40

POLAR® ----------41
- N10DC....42
- N8DC....43
- N8X....44
- N7X....44

N2000 SERIES ----------45
- N2175....46
- N2152R....47
- N2090R....48

NORCOLD® REFRIGERATORS -----49
- DE105....50
- N4141....51
- NR751....52
- NR740....52

NORCOLD® DOOR PANELS --------53

NORCOLD® VENTS & ACCESSORIES ----------54

NORCOLD® VENTS & ACCESSORIES ----------55

TOILETS

Tecma® Silence Plus 2G

Ceramic Macerating Toilet

- Integrated 12-volt macerator capable of pumping 120 feet with an 8-foot rise
- Includes the Premium Plus Wall Controller
- Hidden fasteners for quick and easy installation
- Air admittance valve optimizes venting and prevents syphoning
- Available with SloClose™ seat and cover

Premium Plus Wall Controller

- Electronic toilet operation
- Ability to program water usage, monitor tank and overfill protection
- Easy to install waterproof connectors

TECMA® SILENCE PLUS 2G *DIMENSIONS ON PAGE 17*

SKU	Color	Description	Information	Carton Wt (lb)	Carton Vol (cf)	Volts	Circuit Breaker
98262	White	TECMA® Silence Plus 2G	High Profile	68.60	6.86	12V	30 amps
98265	White	TECMA® Silence Plus 2G	Low Profile	65.00	6.60	12V	30 amps
98266	Bone	TECMA® Silence Plus 2G	High Profile	68.00	6.82	12V	30 amps
98267	Bone	TECMA® Silence Plus 2G	Low Profile	65.00	6.60	12V	30 amps
98268	Black	TECMA® Silence Plus 2G	High Profile	68.60	6.86	12V	30 amps
98362	White	TECMA® Silence Plus 2G	High Profile w/ SloClose™	68.60	6.86	12V	30 amps
98365	White	TECMA® Silence Plus 2G	Low Profile w/ SloClose™	65.00	6.60	12V	30 amps
98366	Bone	TECMA® Silence Plus 2G	High Profile w/ SloClose™	68.00	6.82	12V	30 amps
98367	Bone	TECMA® Silence Plus 2G	Low Profile w/ SloClose™	65.00	6.60	12V	30 amps
98268	Black	TECMA® Silence Plus 2G	High Profile w/ SloClose™	68.60	6.86	12V	30 amps

Aqua-Magic® Style Plus

Hybrid Ceramic Bowl on Polypropylene Base Toilet

- Residential style ceramic bowl with comfortable SloClose™ seat and cover
- Offers powerful single pedal flush that provides optimal bowl coverage
- Available with a water saving hand sprayer

AQUA-MAGIC® STYLE PLUS *DIMENSIONS ON PAGE 18*

SKU	Color	Description	Information	Carton Wt (lb)	Carton Vol (cf)
34429	White	Aqua-Magic® Style Plus	High Profile	45.00	6.21
34433	White	Aqua-Magic® Style Plus	Low Profile	43.00	5.15
34430	Bone	Aqua-Magic® Style Plus	High Profile	45.00	6.21
34438	Bone	Aqua-Magic® Style Plus	Low Profile	43.00	5.15
34431	White	Aqua-Magic® Style Plus	High Profile w/ Hand Sprayer	46.00	6.21
34434	White	Aqua-Magic® Style Plus	Low Profile w/ Hand Sprayer	44.00	5.15
34435	Bone	Aqua-Magic® Style Plus	High Profile w/ Hand Sprayer	46.00	6.21
34439	Bone	Aqua-Magic® Style Plus	Low Profile w/ Hand Sprayer	44.00	5.15

Aqua-Magic® Style II

Hybrid Ceramic Bowl on Polypropylene Base Toilet

- Ceramic bowl with comfortable SloClose™ seat and cover
- Offers powerful single pedal flush that provides optimal bowl coverage
- Available with a water saving hand sprayer
- Updated packaging on high profile white models allows for safe shipping *

SloClose™ TOILET SEAT & COVER

AQUA-MAGIC® STYLE II *DIMENSIONS ON PAGE 18*

SKU	Color	Description	Information	Carton Wt (lb)	Carton Vol (cf)
42058*	White	Aqua-Magic® Style II	High Profile	35.00	5.51
42059	White	Aqua-Magic® Style II	Low Profile	34.00	4.18
42062*	Bone	Aqua-Magic® Style II	High Profile	35.00	5.51
42063	Bone	Aqua-Magic® Style II	Low Profile	34.00	4.18
42060*	White	Aqua-Magic® Style II	High Profile w/ Hand Sprayer	36.00	5.51
42061	White	Aqua-Magic® Style II	Low Profile w/ Hand Sprayer	35.00	4.18
42064*	Bone	Aqua-Magic® Style II	High Profile w/ Hand Sprayer	36.00	5.51
42065	Bone	Aqua-Magic® Style II	Low Profile w/ Hand Sprayer	35.00	4.18

Aqua-Magic® Residence

Premium Lightweight Toilet

- ADA compliant 18-inch seat height
- Residential sized SloClose™ seat and cover
- High performing flush mechanism maximizes performance
- Convenient single pedal to add water or flush
- Mounting and connections are engineered for accessibility and easy installation

SloClose™ TOILET SEAT & COVER

AQUA-MAGIC® RESIDENCE *DIMENSIONS ON PAGE 19*

SKU	Color	Description	Information	Carton Wt (lb)	Carton Vol (cf)
42169	White	Aqua-Magic® Residence	High Profile	12.3	3.62
42170	White	Aqua-Magic® Residence	Low Profile	10.65	2.68
42171	Bone	Aqua-Magic® Residence	High Profile	12.3	3.62
42172	Bone	Aqua-Magic® Residence	Low Profile	10.65	2.68
42173	White	Aqua-Magic® Residence	High Profile w/ Hand Sprayer	13.3	3.62
42174	White	Aqua-Magic® Residence	Low Profile w/ Hand Sprayer	11.65	2.68
42175	Bone	Aqua-Magic® Residence	High Profile w/ Hand Sprayer	13.3	3.62
42176	Bone	Aqua-Magic® Residence	Low Profile w/ Hand Sprayer	11.65	2.68

Aqua-Magic® VI

Space Saving Lightweight Toilet

- Space saving design allows for the closest possible mounting to the wall
- Foot flush positioned for minimal floor space interference
- Improved mounting bolt slots specifically designed for easy installation
- Residential sized SloClose™ seat and cover
- ADA compliant 18-inch seat height - High Profile
- Provides the deepest toilet bowl available for RVs

SloClose™ TOILET SEAT & COVER

AQUA-MAGIC® VI *DIMENSIONS ON PAGE 19*

SKU	Color	Description	Information	Carton Wt (lb)	Carton Vol (cf)
31833	White	Aqua-Magic® VI	Low Profile	10.25	2.41
31834	Parchment	Aqua-Magic® VI	Low Profile	10.25	2.41
31835	White	Aqua-Magic® VI	High Profile	10.75	3.03
31836	Parchment	Aqua-Magic® VI	High Profile	10.75	3.03
31837	White	Aqua-Magic® VI	Low Profile w/ Hand Sprayer	10.85	2.41
31838	Parchment	Aqua-Magic® VI	Low Profile w/ Hand Sprayer	10.85	2.41
31839	White	Aqua-Magic® VI	High Profile w/ Hand Sprayer	11.35	3.03
31840	Parchment	Aqua-Magic® VI	High Profile w/ Hand Sprayer	11.35	3.03

Aqua-Magic® Bravura

Universal Mount Lightweight Toilet

- Easy to install with universal floor flange that can match any RV toilet bolt pattern
- Pedal flush with pulsating action provides a fast full-bowl wash
- Available with a water saving hand sprayer

AQUA-MAGIC® BRAVURA *DIMENSIONS ON PAGE 20*

SKU	Color	Description	Information	Carton Wt (lb)	Carton Vol (cf)
31084	White	Aqua-Magic® Bravura	High Profile	18.70	3.93
31120	White	Aqua-Magic® Bravura	Low Profile	17.15	3.16
31085	Parchment	Aqua-Magic® Bravura	High Profile	18.70	3.93
31119	Parchment	Aqua-Magic® Bravura	Low Profile	17.15	3.16
31100	White	Aqua-Magic® Bravura	High Profile w/ Hand Sprayer	19.34	3.93
31122	White	Aqua-Magic® Bravura	Low Profile w/ Hand Sprayer	17.75	3.16
31101	Parchment	Aqua-Magic® Bravura	High Profile w/ Hand Sprayer	19.34	3.93
31121	Parchment	Aqua-Magic® Bravura	Low Profile w/ Hand Sprayer	17.75	3.16

Cassette® C220 Series

Portable Toilets with Removable Waste Holding Tanks

- Space saving bowl rotates 180° on the base
- Flexible portrait or landscape service door orientation
- Includes waste tank level indicator
- Waste tank capacity: 4.75 gal (18 L)

CASSETTE® C220 SERIES *DIMENSIONS ON PAGE 20*

SKU	Color	Description	Information	Carton Wt (lb)	Carton Vol (cf)
200865SP	White	Cassette® C223-S	Electric Flush, Flush Water Hook-up	17.00	4.29
200866SP	White	Cassette® C223-CS	Electric Flush, Flush Water Hook-up, w/ Cover	17.70	4.58
200871SP	White	Cassette® C224-CW	Manual Flush, Flush Water Tank Only, w/ Door	24.45	6.04

Porta Potti®

The Original Portable Toilet

- Convenient carrying handle and lid latch
- Comfortable seat heights with large bowls
- Exclusive rotating pour-out spout

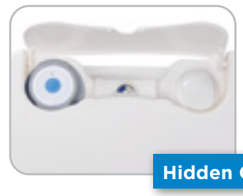

PORTA POTTI®

SKU	Color	Description	Information	Fresh Water Tank (gal)	Waste Tank (gal)	Carton Wt (lb)	Carton Vol (cf)
92306	White	Porta Potti® 565E	Electric Flush w/ Level Indicator	4.00	5.50	12.10	2.80
92820	White	Porta Potti® 365	Piston Flush w/ Level Indicator	4.00	5.50	8.80	2.40
92814	White	Porta Potti® 345	Piston Flush w/ Level Indicator	4.00	3.20	8.40	1.90
92828	White	Porta Potti® 335	Piston Flush w/ Level Indicator	2.60	2.60	7.30	1.50
92860	White	Porta Potti® 135	Bellows Flush	2.60	2.60	7.30	1.50

Toilet Riser

Hand Sprayer

Storage Bag

ACCESSORIES

SKU	Color	Description	Information	Carton Wt (lb)	Carton Vol (cf)
24967	White	Thetford® Toilet Riser	Fits all Thetford Toilets Except Aria	3.40	0.41
24818	Parchment	Thetford® Toilet Riser	Fits all Thetford Toilets Except Aria	3.40	0.41
08993	White	Thetford® Hand Sprayer	Fits Most Thetford Toilets	0.55	0.15
19289	Chrome	Thetford® Hand Sprayer	Fits Most Thetford Toilets	0.70	0.17
299901	Black	Porta Potti® Storage Bag	Large (565E & 365)	15.00	1.10
299902	Black	Porta Potti® Storage Bag	Small (345, 335 & 135)	12.50	1.10

Tecma® Silence Plus 2G Models

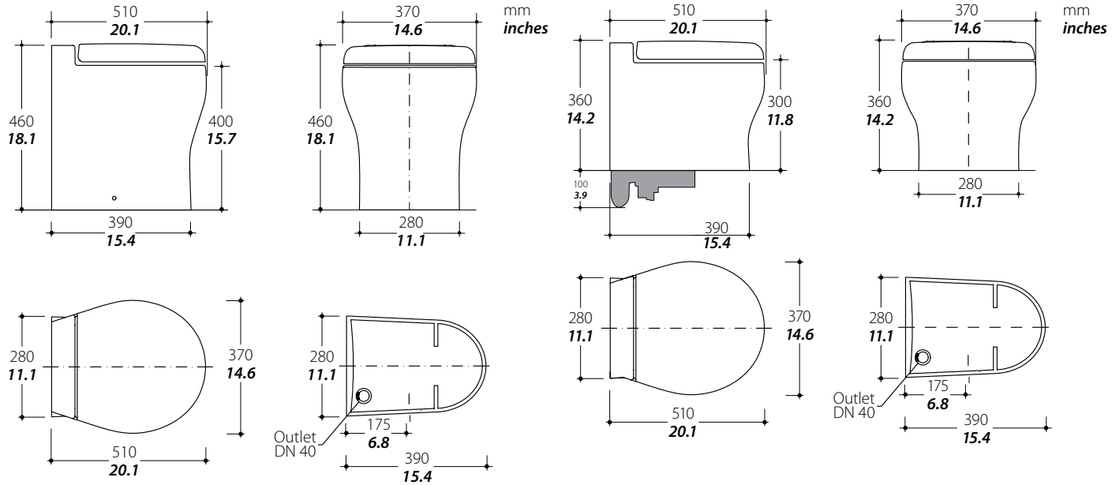

SILENCE PLUS 2G HIGH PROFILE

Height Lid Down	18.1 in/46.0 cm
Width Overall	14.6 in/37.0 cm
Depth Overall	16.9 in/43.0 cm

SILENCE PLUS 2G LOW PROFILE

Height Lid Down	14.2 in/36.0 cm
Width Overall	14.6 in/37.0 cm
Depth Overall	16.9 in/43.0 cm

Aqua-Magic® Style Plus

DIMENSIONS

	High Profile	Low Profile
A	11" : 27.9 cm	11" : 27.9 cm
B	16" : 40.6 cm	16" : 40.6 cm
C	21-13/16" : 55.4 cm	21-13/16" : 55.4 cm
D	14-11/16" : 37.3 cm	14-11/16" : 37.3 cm
E	17-1/2" : 44.5 cm	12-15/16" : 32.8 cm
F	20" : 50.8 cm	15" : 38.1 cm
G	33-1/2" : 85 cm	28" : 71.1 cm

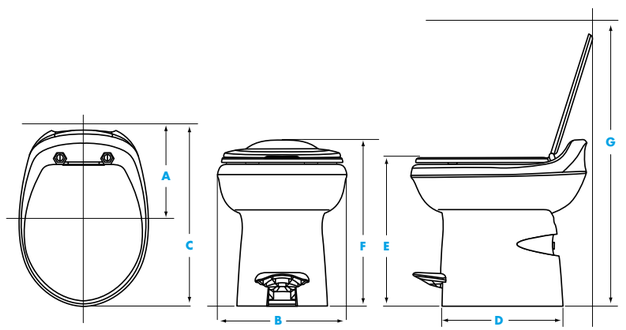

Aqua-Magic® Style II

DIMENSIONS		
	High Profile	Low Profile
A	9-1/2" : 24.1 cm	9-1/2" : 24.1 cm
B	15" : 38.1 cm	15" : 38.1 cm
C	20" : 50.8 cm	20" : 50.8 cm
D	10-1/8" : 25.7 cm	10-1/8" : 25.7 cm
E	17-7/8" : 45.4 cm	12-1/8" : 30.8 cm
F	19-1/2" : 49.5 cm	14" : 35.6 cm
G	33-15/16" : 86.1 cm	28-7/16" : 72.2 cm

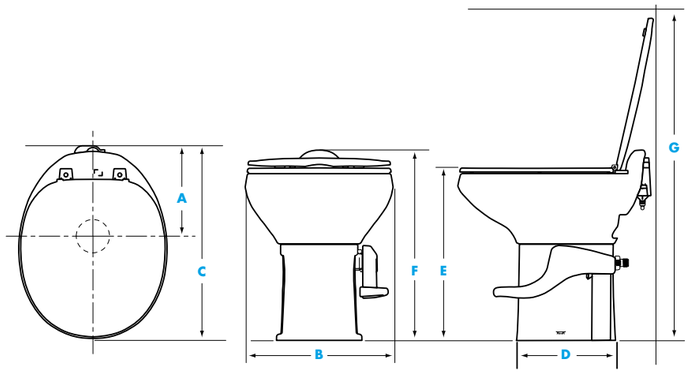

Aqua-Magic® Residence

DIMENSIONS		
	High Profile	Low Profile
A	9-1/2" : 24.1 cm	9-1/2" : 24.1 cm
B	15-1/4" : 38.6 cm	15-1/4" : 38.6 cm
C	19-3/4" : 50.4 cm	19-3/4" : 50.4 cm
D	10-1/8" : 25.7 cm	10-1/8" : 25.7 cm
E	18" : 45.7 cm	12-1/2" : 31.7 cm
F	19-1/2" : 49.1 cm	13-3/4" : 35.1 cm
G	34-1/4" : 87.1 cm	28-3/4" : 73.1 cm

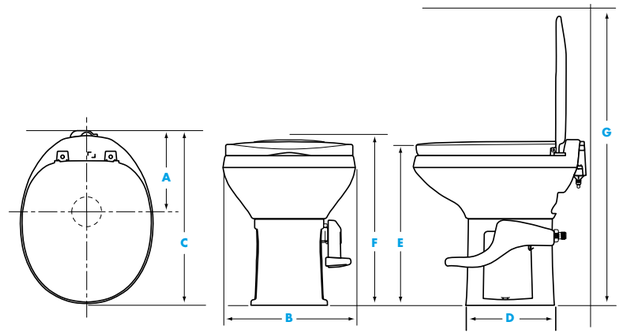

Aqua-Magic® VI

DIMENSIONS		
	High Profile	Low Profile
A	7-5/8" : 19.3 cm	7-5/8" : 19.3 cm
B	15" : 38.02 cm	15" : 38.02 cm
C	17-7/8" : 45.32 cm	17-7/8" : 45.32 cm
D	12-5/8" : 32 cm	12-5/8" : 32 cm
E	17-3/4" : 45.1 cm	13 57/64" : 35.3 cm
F	20-3/8" : 51.8 cm	15-3/4" : 40.07 cm
G	34-1/4" : 87 cm	29-5/8" : 75.3 cm

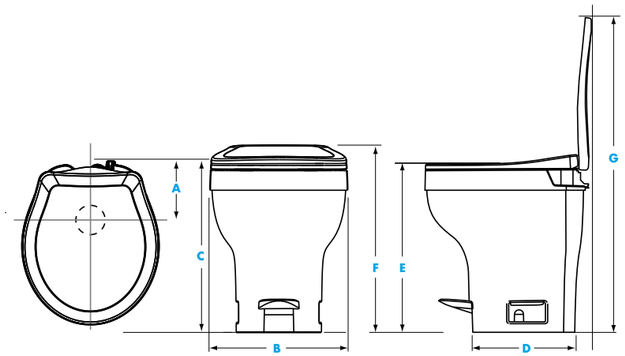

Aqua-Magic® Bravura

DIMENSIONS		
	High Profile	Low Profile
A	11" : 27.9 cm	11" : 27.9 cm
B	16-9/16" : 42.2 cm	16-9/16" : 42.2 cm
C	20-3/16" : 51.3 cm	20-3/16" : 51.3 cm
D	12-1/2" : 31.8 cm	12-1/2" : 31.8 cm
E	16-1/4" : 41.3 cm	13-1/8" : 33.3 cm
F	17-7/8" : 45.4 cm	14" : 35.6 cm
G	34-3/8" : 87.3 cm	30-1/2" : 77.5 cm

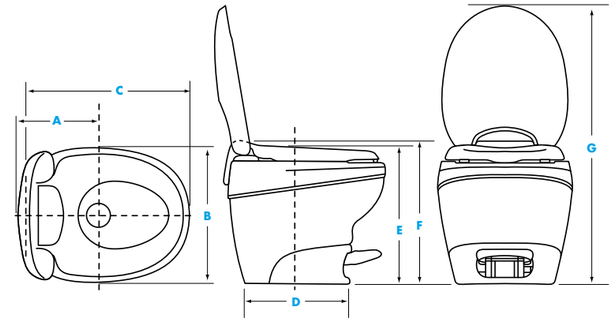

Cassette® C223-S / C223-CS / C224-CW (shown)

DIMENSIONS	
	C223-S
A	28-1/2" : 72.7 cm
B	22-3/4" : 58 cm
C	15-1/2" : 39.4 cm
D	19-1/4" : 49.2 cm

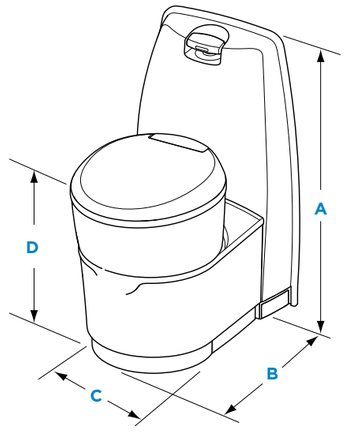

SANITATION SOLUTIONS

Aqua MAX® Spring Showers

Holding Tank Treatment

- Advanced enzyme formula neutralizes odor and accelerates the digestion of waste
- Effectively breaks down waste to prevent clumping, clogging and tank residue
- Tested safe for all RV and marine toilets, holding tanks and septic system
- Available in three convenient options: liquid, dry granules and Toss-Ins®

16 Toss-Ins®

30 Toss-Ins®

8 Dry Packs

SPRING SHOWERS SCENT

6-Pack 8 oz

32 oz

64 oz

128 oz

AQUA MAX® SPRING SHOWERS

SKU	Description	Information	Carton Qty	Carton Wt (lb)	Carton Vol (cf)
96631	Aqua MAX® Spring Showers	16 Pack Toss-Ins®	4	7.50	0.37
96632	Aqua MAX® Spring Showers	30 Pack Toss-Ins®	4	13.00	0.56
96633	Aqua MAX® Spring Showers	8 Pack Dry Granules	6	3.50	0.33
96634	Aqua MAX® Spring Showers	6 Pack / 8 oz Liquid	4	13.50	0.47
96635	Aqua MAX® Spring Showers	32 oz Liquid	6	13.50	0.44
96636	Aqua MAX® Spring Showers	64 oz Liquid	3	13.50	0.46
96637	Aqua MAX® Spring Showers	128 oz Liquid	2	17.50	0.53

Aqua MAX® Summer Cypress

Holding Tank Treatment

- Advanced enzyme formula neutralizes odor and accelerates the digestion of waste
- Effectively breaks down waste to prevent clumping, clogging and tank residue
- Tested safe for all RV and marine toilets, holding tanks and septic system
- Available in three convenient options: liquid, dry granules and Toss-Ins®

16 Toss-Ins®

30 Toss-Ins®

8 Dry Packs

SUMMER CYPRESS SCENT

6-Pack 8 oz | 32 oz | 64 oz | 128 oz

AQUA MAX® SUMMER CYPRESS					
SKU	Description	Information	Carton Qty	Carton Wt (lb)	Carton Vol (cf)
96670	Aqua MAX® Summer Cypress	16 Pack Toss-Ins®	4	7.50	0.37
96665	Aqua MAX® Summer Cypress	30 Pack Toss-Ins®	4	13.00	0.56
96674	Aqua MAX® Summer Cypress	8 Pack Dry Granules	6	3.50	0.33
96689	Aqua MAX® Summer Cypress	6 Pack / 8 oz Liquid	4	13.50	0.47
96686	Aqua MAX® Summer Cypress	32 oz Liquid	6	13.50	0.44
96682	Aqua MAX® Summer Cypress	64 oz Liquid	3	13.50	0.46
96678	Aqua MAX® Summer Cypress	128 oz Liquid	2	17.50	0.53

AQUAbio™ Citrus Twist

Holding Tank Treatment

- Quick acting formula eliminates odors while digesting waste and toilet paper to prevent clogging, all without any harsh chemicals
- Tested safe for all RV and marine toilets, holding tanks and septic system
- Available in three convenient options: liquid, dry granules and Toss-Ins®

16 Toss-Ins®

30 Toss-Ins®

8 Dry Packs

citrus twist

6-Pack 8 oz | 32 oz | 64 oz | 128 oz

AQUABIO™ CITRUS TWIST					
SKU	Description	Information	Carton Qty	Carton Wt (lb)	Carton Vol (cf)
96590	AQUAbio™ Citrus Twist	16 Pack Toss-Ins®	12	15.00	0.56
96591	AQUAbio™ Citrus Twist	30 Pack Toss-Ins®	4	12.00	0.51
96600	AQUAbio™ Citrus Twist	8 Pack Dry Granules	12	14.40	0.54
96604	AQUAbio™ Citrus Twist	6 Pack / 8 oz Liquid	6	24.40	0.92
96607	AQUAbio™ Citrus Twist	32 oz Liquid	12	28.80	0.77
96610	AQUAbio™ Citrus Twist	64 oz Liquid	6	29.20	0.84
96614	AQUAbio™ Citrus Twist	128 oz Liquid	4	39.00	1.01

Thetford® Grey Water Odor Control

- Prevents and removes grease build-up
- 100% biodegradable formula

Thetford® Level Gauge Cleaner

- Dissolves waste, tissue and soap scum
- Restores sensor operation in both grey and black water tanks

Thetford® Tissue Digester

- Prevents tissue build-up and clogging
- Safe for all waste systems

Thetford® Drain Valve Lubricant

- Restores smooth operation of valves
- Coats plumbing lines for consistent tank outflow

Thetford® Toilet Seal Lubricant & Conditioner

- Extends toilet seal life and helps prevent sticking
- Silicone-based formula penetrates and coats seal for smooth operation

Thetford® Fresh Water Tank Sanitizer

- Kills harmful bacteria without using bleach or chlorine
- Easy-to-use two-part system

Tank Blaster® Holding Tank Cleaner

- Super concentrated enzyme blend breaks down waste and prevents clumping, clogging and tank residue
- Safe for all RV toilets, holding tanks and septic systems
- Works in both grey and black water tanks

SPECIALTY CHEMICALS

SKU	Description	Information	Carton Qty	Carton Wt (lb)	Carton Vol (cf)
15842	Thetford® Grey Water Odor Control	24 oz Liquid	6	10.60	0.34
24545	Thetford® Level Gauge Cleaner	19 oz Dry Granules	6	7.00	0.22
15844	Thetford® Tissue Digester	19 oz Dry Granules	6	7.10	0.24
15843	Thetford® Drain Valve Lubricant	24 oz Liquid	6	8.90	0.24
36663	Thetford® Toilet Seal Lubricant & Conditioner	24 oz Liquid	6	9.90	0.24
36662	Thetford® Fresh Water Tank Sanitizer	2 - 24 oz Liquid	4	15.00	4.00
96527	Tank Blaster® Holding Tank Cleaner	4 Pack Dry Granules	6	2.80	0.29
96547	Tank Blaster® Holding Tank Cleaner	10 Pack Dry Granules	1	12.00	0.56

Aqua-Soft® 2-Ply Toilet Tissue

- Soft and highly absorbent tissue
- Safe to use with all RV and marine toilets, holding tanks and septic systems
- 100% biodegradable

Thetford® 1-Ply Toilet Tissue

- Dissolves quickly
- Safe to use with all RV and marine toilets, holding tanks and septic systems
- 100% biodegradable

Aqua-Soft® 2-Ply Toilet Tissue

Thetford® 1-Ply Toilet Tissue

AQUA-SOFT® & THETFORD TOILET TISSUE

SKU	Description	Information	Carton Qty	Carton Wt (lb)	Carton Vol (cf)
03300	Aqua-Soft® 2-Ply Toilet Tissue*	4 Pack	12	19.20	2.75
24033	Aqua-Soft® 2-Ply Toilet Tissue	Single Roll	48	13.90	3.76
20804	Thetford® 1-Ply Toilet Tissue*	4 Pack	24	20.80	4.64

RV CARE

Protect All® All-Surface Care

- Cleans, polishes, waxes, treats and protects most vehicle surfaces
- Creates a super slick, anti-static finish for easier and less frequent cleaning

Protect All® Rubber Roof Cleaner (Step 1)

- Simple 2-bucket system
- No rinse required - spray on, mop and air dry

Protect All® Rubber Roof Treatment (Step 2)

- Anti-static water repellant – dust and water resistant
- Spray and spread

Protect All® Fiberglass Oxidation Remover

- One-step application cleans, polishes and seals
- Restores color to fiberglass, gelcoat, enamel and polyurethane

All-Surface Care

Rubber Roof Cleaner

Fiberglass Oxidation Remover

Rubber Roof Treatment

EXTERIOR CLEANERS

SKU	Description	Information	Carton Qty	Carton Wt (lb)	Carton Vol (cf)
62015	Protect All® All-Surface Care	13.5 oz Aerosol	12	13.20	0.47
62016	Protect All® All-Surface Care	16 oz Liquid	6	7.00	0.39
62032	Protect All® All-Surface Care	32 oz Liquid	6	25.50	0.93
62010	Protect All® All-Surface Care	128 oz Liquid	4	36.00	0.79
67032	Protect All® Rubber Roof Cleaner	32 oz Liquid	6	27.80	0.93
67128	Protect All® Rubber Roof Cleaner	128 oz Liquid	4	36.00	0.79
68032	Protect All® Rubber Roof Treatment	32 oz Liquid	6	27.80	0.77
68128	Protect All® Rubber Roof Treatment	128 oz Liquid	4	35.00	0.79
55032	Protect All® Fiberglass Oxidation Remover	32 oz Liquid	12	27.50	0.77

Thetford® Wash & Wax
- Two-for-one product provides great wash and protective shine
- Cleans medium to heavy soils

Thetford® RV Wax
- Removes oxidation and restores color to dull surfaces
- Carnauba wax and UV blockers keep surfaces looking better longer

Thetford® Protect & Shine
- Provides long lasting protection against dust and spills and prevents cracking and fading
- Restores vibrant color and shine to rubber, vinyl and plastic

Thetford® Rubber Roof Cleaner & Conditioner
- Non-petroleum formula deep cleans and conditions in one step
- Removes oxidation and protects from UV damage

Rubber Roof Cleaner & Conditioner

Wash & Wax

RV Wax

Protect & Shine

RV CARE | Exterior Cleaners

Thetford® Black Streak & Bug Remover
- Removes tough marks, black streaks and bugs
- Safe for gelcoat, fiberglass, decals and painted aluminum

Thetford® Bug Bust
- Formulated for hard to remove, sunbaked bugs
- Safe for gelcoat, fiberglass, decals and painted aluminum

Thetford® Awning Cleaner
- Removes stains and blocks UV rays
- Safe for all vinyl and fabric awnings

UltraFoam® Black Streak & Bug Remover
- Foaming action clings to surfaces, penetrates and lifts stubborn stains
- Safe for gelcoat, fiberglass, decals and painted aluminum

UltraFoam® Awning Cleaner
- Foaming action clings to surfaces for easy cleaning and stain removal
- Safe for all vinyl and fabric awnings

Black Streak & Bug Remover

Bug Bust

Awning Cleaner

UltraFoam® Awning Cleaner

UltraFoam® Black Streak & Bug Remover

EXTERIOR CLEANERS

SKU	Description	Information	Carton Qty	Carton Wt (lb)	Carton Vol (cf)
32516	Thetford® Wash & Wax	32 oz Liquid	6	15.50	0.50
96014	Thetford® Wash & Wax	64 oz Liquid	6	27.00	0.79
32517	Thetford® Wash & Wax	128 oz Liquid	4	36.40	1.00
32523	Thetford® RV Wax	128 oz Liquid	4	35.80	1.00
32755	Thetford® Protect & Shine	32 oz Liquid w/ Trigger	6	14.28	0.60
32756	Thetford® Protect & Shine	128 oz Liquid w/ Spray Hose	4	32.60	1.00
32512	Thetford® Rubber Roof Cleaner & Conditioner	32 oz Liquid w/ Trigger	6	14.58	0.60
96016	Thetford® Rubber Roof Cleaner & Conditioner	64 oz Liquid	6	27.00	0.79
32513	Thetford® Rubber Roof Cleaner & Conditioner	128 oz Liquid w/ Spray Hose	4	36.60	1.00

EXTERIOR CLEANERS

SKU	Description	Information	Carton Qty	Carton Wt (lb)	Carton Vol (cf)
32501	Thetford® Black Streak & Bug Remover	32 oz Liquid w/ Trigger	6	15.00	0.66
96015	Thetford® Black Streak & Bug Remover	64 oz Liquid	6	27.00	0.79
32511	Thetford® Black Streak & Bug Remover	128 oz Liquid w/ Spray Hose	4	36.80	1.00
32613	Thetford® Bug Bust	32 oz Liquid w/ Trigger	6	14.70	0.66
32518	Thetford® Awning Cleaner	32 oz Liquid w/ Trigger	6	14.40	0.50
96017	Thetford® Awning Cleaner	64 oz Liquid	6	27.00	0.79
32519	Thetford® Awning Cleaner	128 oz Liquid w/ Spray Hose	4	36.80	1.00
32816	UltraFoam® Black Streak & Bug Remover	32 oz Liquid w/ Trigger	6	16.02	1.00
32822	UltraFoam® Awning Cleaner	32 oz Liquid w/ Trigger	6	16.02	1.00

Thetford® Aqua-Foam Toilet Cleaner

- Penetrates and removes grime without scrubbing
- Specifically designed safe for RV toilets and septic systems

UltraFoam® Aqua-Clean Surface Cleaner

- Gently and effectively removes soap scum, iron stains and hard water deposits
- Safe for use on plastic, fiberglass and porcelain surfaces
- Meets U.S. EPA safe product standards

Aqua-Foam Toilet Cleaner

Aqua-Clean Surface Cleaner

EPA/Safer Choice recognition does not constitute endorsement of this product. The Safer Choice logo signifies that the product's formula, as has represented it to the EPA, contains ingredients with more positive human health and environmental characteristics than conventional products of the same type. EPA/Safer Choice relies solely on Thetford, its integrity and good faith, for information on the product's composition, ingredients and attributes. EPA/Safer Choice has not independently identified, that is, via chemical analysis, the ingredients in the product formula, nor evaluated any of Thetford's non-ingredient claims. EPA/Safer Choice provides its evaluation only as to the product's human health and environmental characteristics, as specified in the Standard and based on currently available information and scientific understanding.

INTERIOR CLEANERS

SKU	Description	Information	Carton Qty	Carton Wt (lb)	Carton Vol (cf)
96009	Thetford® Aqua-Foam Toilet Cleaner	3 Pack Dry Granules	6	2.30	0.16
96031	Thetford® Aqua-Foam Toilet Cleaner	18 Pack Dry Granules	2	4.50	0.29
96109	Thetford® Aqua-Foam Toilet Cleaner	100 Pack Dry Granules	1	12.00	0.56
36971	UltraFoam® Aqua-Clean Surface Cleaner	32 oz w/ Trigger	6	14.58	0.58

Protect All® Slide-Out Rubber Seal Treatment

- Unique foaming action stays where sprayed
- Keeps rubber surfaces clean creating a more effective seal
- UV protectant and water repellant extends the life of rubber seals

Protect All® Slide-Out Dry Lube

- Heavy duty formula prevents rust and corrosion
- Creates a dry film that lubricates without attracting dust and grime
- Keeps mechanisms like hinges and gears operating smoothly

Protect All® Chain Life

- Unique foaming action eliminates overspray and waste
- Creates a barrier between moving parts that repels dust and grime and withstands extreme heat and pressure

Protect All® Cable Life

- Cleans and lubricates extending the life of wire and other cables
- Displaces moisture and prevents rust

Protect All® Cable Life Cable Care Kit

- Includes: Protect All® Cable Life & Protect All® Cable Life Luber Tool

Thetford® Rubber Seal Conditioner

- Prevents fading, cracking and deterioration
- Cleans, conditions, shines and provides a protective coating that repels water

Thetford® Slide-Out Lubricant

- Lubricates rails and gears to improve slide-out function
- Protects mechanisms from road elements and displaces moisture to prevent rust

Slide-Out Rubber Seal Treatment

Slide-Out Dry Lube

Chain Life

Cable Life

Cable Life Cable Care Kit

Rubber Seal Conditioner

Slide-Out Lubricant

INTERIOR CLEANERS

SKU	Description	Information	Carton Qty	Carton Wt (lb)	Carton Vol (cf)
40015	Protect All® Slide-Out Rubber Seal Treatment	17 oz Aerosol	12	16.10	0.54
40003	Protect All® Slide-Out Dry Lube	16 oz Aerosol	12	15.40	0.54
32778	Thetford® Slide-Out Rubber Seal Conditioner	14 oz Aerosol	6	6.96	0.12
32777	Thetford® Slide-Out Lubricant	13 oz Aerosol	6	6.78	0.12
35017PA	Protect All® Chain Life	17 oz Aerosol	12	16.50	0.54
25006	Protect All® Cable Life	6.25 oz Aerosol	24	14.10	0.55
20006	Protect All® Cable Life Cable Care Kit	6.25 oz Aerosol + 1 Tool	12	11.30	1.05

EVACUATION

Titan® Tote 4-Wheel Tote

Premium Portable Waste Tank

- The simplest and most durable tote on the market
- Offers the industry's lowest fill height
- Comes fully assembled with integrated Titan® Sewer Hose and rugged all-terrain wheels
- Includes Permastore™ compartment to store and protect the hose, elbow valve and end cap

21 Gallon

27 Gallon

35 Gallon

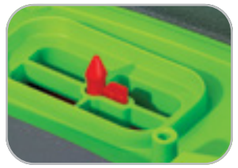

AutoStop

Ladder Hook

Tow Handle

90° elbow

TITAN® TOTE 4-WHEEL TOTE

SKU	Description	Information	Order Qty	Carton Wt (lb)	Carton Vol (cf)
40950	Titan® Tote 4-Wheel	21 Gallon w/ 90° Elbow Valve	6	36.00	8.97
40951	Titan® Tote 4-Wheel	27 Gallon w/ 90° Elbow Valve	6	38.00	9.16
40952	Titan® Tote 4-Wheel	35 Gallon w/ 90° Elbow Valve	4	44.00	12.08

Titan® Tote 2-Wheel Tote

Premium Portable Waste Tank

- The simplest and most durable tote on the market
- Offers the industry's lowest fill height
- Comes fully assembled with fully integrated Titan® Sewer Hose and rugged all-terrain wheels
- Sturdy grab handle makes it easy to pull by hand or use the attached tow strap to connect to vehicle hitch
- Optional 90° Elbow Valve

21 Gallon

27 Gallon

35 Gallon

Titan® Tote Conversion Kit

- Convert any 2-Wheel Titan® Tote into a 4-Wheel tote
- Includes wheels, steering assembly and handle

Conversion Kit

SmartTote 2-Wheel Tote

Compact Portable Waste Tank

- 12-gallon portable waste tank only; does not include hose
- Comes fully assembled with caps for hose opening and vent
- Light weight and compact design
- Easy to maneuver and store

SmartTote 12 Gallon

2-WHEEL TOTES

SKU	Description	Information	Order Qty	Carton Wt (lb)	Carton Vol (cf)
40953	Titan® Tote 2-Wheel	21 Gallon	6	24.00	8.26
40954	Titan® Tote 2-Wheel	27 Gallon	6	26.00	8.70
40955	Titan® Tote 2-Wheel	35 Gallon	4	32.00	10.88
40942	Titan® 90° Elbow Valve	Optional Accessory	1	1.00	0.25
40997	Titan® Tote Conversion Kit	Wheels, Assembly & Handle	1	15.23	2
40505	SmartTote 2-Wheel	12 Gallon w/out Hose	12	126.60	43.20

Titan® 20 ft. Sewer Kit

- Two (2) 10 ft. Titan® Extension Hoses
- One (1) Revolve® 5-in-1 sewer adapter
- Four (4) end caps

Titan® 15 ft. Sewer Kit

- One (1) 15 ft. Titan® Extension Hose
- One (1) Revolve® 5-in-1 sewer adapter
- Two (2) end caps

Titan® Sewer Hose

- Available in 10 ft. and 5 ft. lengths
- Proprietary Thermal Plastic Elastomer (TPE) hose design is puncture and abrasion resistant
- Ergonomic ExtendGrip® fitting for easy handling

Titan® Sewer Hose Support System

- Includes five (5) graduated 24" sections that nest together and storage bag
- Configure to guide up to 15 ft. of Titan® or other hoses
- Durable, rust resistant poly construction

20 ft. Sewer Kit

10 ft. Sewer Hose

15 ft. Sewer Kit

5 ft. Sewer Hose

Sewer Hose Support System

SEWER HOSE ACCESSORIES

SKU	Description	Information	Order Qty	Carton Wt (lb)	Carton Vol (cf)
17902	Titan® Sewer Kit	20 ft. Complete System	4	18.00	3.77
17853	Titan® Sewer Kit	15 ft. Complete System	4	26.00	6.98
17854	Titan® Sewer Hose	10 ft. Hose Only	6	19.50	3.77
17915	Titan® Sewer Hose	5 ft. Hose Only	6	19.50	3.77
17919	Titan® Sewer Hose Support System	Supports 15 ft. of Hose	1	5.40	1.08

Titan® Straight Sewer Adapter

- Lengthens RV sewer outlet for easier reach
- Translucent, user can see when tank is empty

Titan® WYE Sewer Adapter

- Allows user to empty two takes into one dump port
- Translucent, user can see when tank is empty

Titan® End Caps

- Fits any Titan® opening reducing leakage or spills

Titan® Seals

- For use with Titan® sewer hoses, sewer adapters and 90° Elbow Valve

Titan® Tote Drip Cap

- For use with all Titan® Totes

LadderMount

- Universal tote storage system
- Includes strap to secure tote

Revolve® Universal Sewer Adapter

- 5-in-1 adaptor with stepped base to fit most ports
- Translucent elbow, user can see when tank is empty
- Ergonomic handle for secure grip

Straight Sewer Adapter

WYE Sewer Adapter

End Caps

Seals

Universal Sewer Adapter

LadderMount

SEWER HOSE ACCESSORIES

SKU	Description	Information	Order Qty	Carton Wt (lb)	Carton Vol (cf)
17907	Titan® Straight Sewer Adapter	Accessory	6	2.70	0.41
17832	Titan® WYE Sewer Adapter	Accessory	6	4.90	1.25
17880	Titan® End Caps	2 Per Pack	12	3.00	0.03
17881	Titan® Seals	2 Per Pack	12	3.00	0.03
40750	Titan® Tote Drip Cap	Accessory	6	1.80	0.90
17879	Revolve® Universal Sewer Adapter	Accessory	6	4.50	1.19
40830	LadderMount	Accessory	12	126.60	43.20

Sani-Con® Turbo 600S

- Storage Bay Holding Tank Evacuation System
- Designed specifically for RVs with a sewer outlet in the storage bay
- Permanent installation saves time and reduces chance of spills
- Compact 1 1/2-inch diameter 21 ft. retractable hose is easy to access and completely hidden in the storage bay

Sani-Con® Turbo 500S

- Direct Mount Holding Tank Evacuation System
- For use when the sewer outlet needs to be cut-back
- Permanent installation saves time and reduces chance of spills
- Hose and nozzle can be routed to the storage bay or to an optional storage box
- Compact 1 1/2-inch diameter 21 ft. retractable hose

Sani-Con® Turbo 400S

- Bayonet Mount Holding Tank Evacuation System
- For use when the sewer outlet doesn't need to be cut-back
- Permanent installation saves time and reduces chance of spills
- Hose and nozzle can be routed to storage bay or to an optional storage box
- Compact 1 1/2-inch diameter 21 ft. retractable hose

Sani-Con® Turbo 300

- Portable Holding Tank Evacuation System
- Delivers convenience and power when a permanent installation is not possible
- Can be powered with a portable battery or wired for a quick connection
- Compact 1 1/2-inch diameter 21 ft. retractable hose

SANICON® TURBO

600 S

500 S

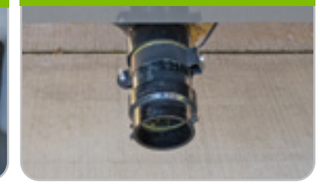

400 S

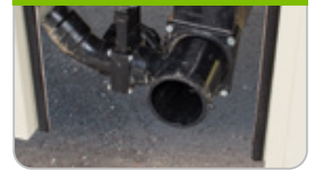

300

Powerful 12-volt, 1/2 hp motor enables dumping uphill 9 feet or up to 100 feet horizontally on all models

SEWER HOSE ACCESSORIES

SKU	Description	Information	Order Qty	Carton Wt (lb)	Carton Vol (cf)
97588	Sani-Con® Turbo 600 S	Storage Bay System	1	14.00	1.51
97587	Sani-Con® Turbo 500 S	Direct Mount System	1	12.8	1.51
97650	Sani-Con® Turbo 400 S	Bayonet Mount System	1	12.4	1.51
97586	Sani-Con® Turbo 300	Portable System	1	14.2	1.31

Sani-Con® Turbo Storage Box

- Available in 12-inch or 19-inch sizes
- Attaches to the I-beam, underneath the RV, with self-tapping screws
- Includes mounting hardware, hose adapter and hose clamp

Sani-Con® Turbo Replacement Door

- For both 12-inch and 19-inch Sani-Con® Turbo Storage Boxes
- Includes replacement screws

Sani-Con® Turbo Discharge Hose

- For use with Sani-Con® Turbo 500 S and 400 S
- Includes 50 ft. of hose

Storage Box

Discharge Hose

SEWER HOSE ACCESSORIES

SKU	Description	Information	Order Qty	Carton Wt (lb)	Carton Vol (cf)
97648	Sani-Con® Turbo Storage Box	12-inch Box w/ Hardware	1	7.00	1.51
97625	Sani-Con® Turbo Storage Box	19-inch Box w/ Hardware	1	9.00	2.13
97607	Sani-Con® Turbo Replacement Door	w/ Screws	1	2.00	0.15
97655	Sani-Con® Turbo Discharge Hose	50 ft. Spool - Spa Hose	1	26.70	6.00

POLAR® ELITE

Polar® Elite refrigerators provide ample storage capacity, residential styling, DC compressor convenience and RV ready features.

N20DC

19 cu. ft. Compressor Refrigerator

Residential Styling

- Stainless steel French doors
- Glass interior shelves and clear door bins
- A sliding shelf that adjusts for various sized containers
- Integrated door-mounted digital control panel

DC Compressor Convenience

- 19 cu. ft. of storage capacity in the same cutout as a 18 cu. ft. RV refrigerator
- Unique power management system that ensures the lowest amp draw possible
- An adjustable independent thermostat for fresh and frozen compartments

RV Ready Features

- Individual compressors with separate wire inputs allow for flexibility in wire size selection
- RV standard mounting method for easy installation without any add-on brackets
- Fully integrated ergonomic door and travel latches with easy-open lighted handles
- Adjustable shelf dividers to ensure proper storage of items during transit

Energy Efficient

- Capable of running for up to 20 hours on a single battery charge
- Night mode reduces compressor and fan speed

SKU	Description	Cutout Dimensions	Listed 12V/DC Amp Draw	Typical 12V/DC Amp Draw	Weight
		H x W x D (in.)	Std. Mode	Std. Mode	Net (lb.)
N20DCSS	19 cu. ft., Stainless	69 x 36 x 24	12.50	6.50	241
N20DCIMSS	19 cu. ft., Stainless & Ice Maker	69 x 36 x 24	12.50	6.50	246

N15DC

15 cu. ft. Compressor Refrigerator

Residential Styling

- Stainless steel French doors
- Glass interior shelves and clear door bins
- A sliding shelf that adjusts for various sized containers
- Integrated door-mounted digital control panel

DC Compressor Convenience

- 15 cu. ft. of storage capacity in the same cutout as a 12 cu. ft. RV refrigerator
- Unique power management system that ensures the lowest amp draw possible
- An adjustable independent thermostat for fresh and frozen compartments

RV Ready Features

- Individual compressors with separate wire inputs allow for flexibility in wire size selection
- RV standard mounting method for easy installation without any add-on brackets
- Fully integrated ergonomic door and travel latches with easy-open lighted handles

Energy Efficient

- Capable of running for up to 27 hours on a single battery charge
- Night mode reduces compressor and fan speed

SKU	Description	Cutout Dimensions	Listed 12V/DC Amp Draw	Typical 12V/DC Amp Draw	Weight
		H x W x D (in.)	Std. Mode	Std. Mode	Net (lb.)
N15DCSS	15 cu. ft., Stainless	63 5⁄16 x 32 3⁄4 x 24	12.50	6.50	216
N15DCIMSS	15 cu. ft., Stainless & Ice Maker	63 5⁄16 x 32 3⁄4 x 24	12.50	6.50	221

POLAR® MAX

Designed specifically for the rigors of the road, Polar® Max LP gas absorption refrigerators offer quiet operation, maximum storage space and exceptional styling.

2118

18 cu. ft. LP Gas Absorption Refrigerator

WHILE SUPPLIES LAST

RV Ready Features

- Uses silent gas absorption process with no moving parts
- Positive locking recessed door handles open easily and has a built-in travel latch
- Adjustable wire shelves have a front lip to keep food secure

Maximum Storage

- Full-width food and freezer compartments
- Covered crispers with pop-up lids protect food from spills
- Center slide-out bin between crispers optimizes space utilization

Exceptional Styling

- Cabinet-depth design for a clean and comfortable fit in RV kitchens
- Eye level exterior LCD control panel is easy to see and operate
- Available with stainless steel doors installed or black trim for optional black panel doors or custom wood panels

SKU	Description	Cutout Dimensions	Amp Draw		Weight
		H x W x D (in.)	120V/AC	12V/DC	Net (lb.)
2118SS	18 cu. ft., Stainless	69 x 36 x 24	5.00	2.75	251

*Door panels sold separately. Dimensions can be found on page 53.

1210

12 cu. ft. LP Gas Absorption Refrigerator

WHILE SUPPLIES LAST

RV Ready Features

- Uses silent gas absorption process with no moving parts
- Embedded steel A-frame is protected from bending and corrosion
- Adjustable thermostat allows user to respond to ambient temperature changes

Maximum Storage

- Removable, adjustable shelving and door bins in fresh food and freezer compartments
- Three pull out bins in fresh food compartment for flexible storage
- Full-width fresh food compartment

Exceptional Styling

- Unique side-by-side four-door configuration
- Eye level exterior LED control panel with built-in diagnostics
- Available with stainless steel doors installed or black trim for optional black panel doors or custom wood panels

SKU	Description	Cutout Dimensions	Amp Draw		Weight
		H x W x D (in.)	120V/AC	12V/DC	Net (lb.)
1210*	12 cu. ft., Black Trim	63 5⁄16 x 32 3⁄4 x 24	1.90	3.80	193
1210IM*	12 cu. ft., Black Trim & Ice Maker	63 5⁄16 x 32 3⁄4 x 24	3.50	5.30	199

*Door panels sold separately. Dimensions can be found on page 53.

POLAR®

The Polar® series of refrigerators offer both DC compressor and gas absorption models for the perfect fit and function for all camping styles.

N10DC

10 cu. ft. Compressor Refrigerator

Perfect Fit

- Provides 10 cu. ft of storage capacity in the same cutout as 8 cu. ft. models
- RV standard mounting method for easy installation without any add-on brackets
- Reversible doors with curved edges in stainless steel or black matte finish

Plenty of Function

- Adjustable thermostat and separate temperature zones for fresh food and freezer sections
- Glass shelves, clear door bins and dual clear crisper drawers
- Shelf retainers secure items while in transit
- Recessed edge door handles with integrated travel latch

Energy Efficiency

- LED top control panel includes venting for improved refrigerator performance
- Night Mode reduces compressor and fan speed to conserve battery charge
- Manual defrost allows user to determine the best time to defrost or conserve battery charge

SKU	Description	Cutout Dimensions	Listed 12V/DC Amp Draw	Typical 12V/DC Amp Draw	Weight
		H x W x D (in.)	Std. Mode	Std. Mode	Net (lb.)
N10DCSSR/L	10 cu. ft., Stainless	59 ⅞ x 23 ½ x 24	8.30	5.00	133
N10DCBKR/L	10 cu. ft., Black Matte	59 ⅞ x 23 ½ x 24	8.30	5.00	133

N8DC

8 cu. ft. Compressor Refrigerator

Perfect Fit

- Provides 8 cu. ft of storage capacity in the same cutout as 6 cu. ft. and 7 cu. ft. models
- RV standard mounting method for easy installation without any add-on brackets
- Reversible doors with curved edges in stainless steel or black matte finish

Plenty of Function

- Adjustable thermostat and separate temperature zones for fresh food and freezer sections
- Wire shelves, clear door bins and dual clear crisper drawers
- Shelf retainers secure items while in transit
- Recessed edge door handles with integrated travel latch

Energy Efficiency

- LED top control panel includes venting for improved refrigerator performance
- Night Mode reduces compressor and fan speed to conserve battery charge
- Manual defrost allows user to determine the best time to defrost or conserve battery charge

SKU	Description	Cutout Dimensions	Listed 12V/DC Amp Draw	Typical 12V/DC Amp Draw	Weight
		H x W x D (in.)	Std. Mode	Std. Mode	Net (lb.)
N8DCSSR/L	8 cu. ft., Stainless	52 ⅞ x 23 ½ x 24	7.90	5.00	112
N8DCBKR/L	8 cu. ft., Black Matte	52 ⅞ x 23 ½ x 24	7.90	5.00	112

N8X

8 cu. ft. LP Gas Absorption Refrigerator

N7X

7 cu. ft. LP Gas Absorption Refrigerator

Fit & Function

- 2-way AC/LP models
- Tall door panels with hidden hinges and recessed door handles create a built-in look
- Control panel with LCD display, adjustable thermostat and mode selection
- Five adjustable shelves, clear door bins and dual clear crisper drawers
- Black trim is standard. Frames accept black door panels or custom wood panels
- Optional Cold Weather Kit allows for continued refrigerator operation down to ambient temperatures of 0° F

N8LX

N7LX

SKU	Description	Cutout Dimensions	Amp Draw		Weight
		H x W x D (in.)	120V/AC	12V/DC	Net (lb.)
N8XFR/L*	8 cu. ft., Black Trim, 2-Way w/ Fan	59 ⅞ x 23 ½ x 24	2.50	1.36	122
N8XR/L*	8 cu. ft., Black Trim, 2-Way	59 ⅞ x 23 ½ x 24	2.50	0.93	121
N7XFR/L *	7 cu. ft., Black Trim, 2-Way w/ Fan	52 ⅞ x 23 ½ x 24	2.50	1.36	113

*Door panels sold separately. Dimensions can be found on page 53.

N2000 SERIES

The Norcold® N2000 Series is the next generation of 12-volt refrigerators. Stylish and energy efficient these 12-volt refrigerators will fit perfectly in any RV.

N2175

6.2 cu. ft. 12-volt Refrigerator

Stylish

- Sleek black flat panel doors
- Left or right opening options
- Ergonomically designed recessed handles that don't intrude into RV living space
- Bottom freezer with generous storage space

Energy Efficient

- Low energy-consuming compressor allows refrigerators to run over 25 hours on a single battery charge
- Reduced energy consumption with advanced electronics
- Control panel with intuitive touch controls and user-friendly graphics offering energy-saving stand by and night modes

SKU	Description	Cutout Dimensions	Listed 12V/DC Amp Draw	Typical 12V/DC Amp Draw	Weight
		H x W x D (in.)	Std. Mode	Std. Mode	Net (lb.)
N2175BPR/L	6.2 cu. ft., Black Panel	49 13⁄64 x 20 45⁄64 x 23 45⁄64	7.00	4.70	84.9

N2152R

5.3 cu. ft. 12-volt Refrigerator

Stylish

- Designed to fit in narrow spaces
- Available with sleek black flat panel doors
- Left or right opening options
- Ergonomically designed recessed handles that don't intrude into RV living space

Energy Efficient

- Low energy-consuming compressor allows refrigerators to run over 25 hours on a single battery charge
- Reduced energy consumption with advanced electronics
- Control panel with intuitive touch controls and user-friendly graphics offering energy-saving stand by and night modes

SKU	Description	Cutout Dimensions	Listed 12V/DC Amp Draw	Typical 12V/DC Amp Draw	Weight
		H x W x D (in.)	Std. Mode	Std. Mode	Net (lb.)
N2152R	5.3 cu. ft., Black Trim	59 13⁄64 x 16 ½ x 22 19⁄64	7.00	4.00	76

N2090R

3.0 cu. ft. 12-volt Refrigerator

Stylish

- Designed to fit in narrow and tight spaces
- Available with sleek black flat panel doors
- Left or right opening options
- Ergonomically designed recessed handles that don't intrude into RV living space

Energy Efficient

- Low energy-consuming compressor allows refrigerators to run over 25 hours on a single battery charge
- Reduced energy consumption with advanced electronics
- Control panel with intuitive touch controls and user-friendly graphics offering energy-saving stand by and night modes

SKU	Description	Cutout Dimensions	Listed 12V/DC Amp Draw	Typical 12V/DC Amp Draw	Weight
		H x W x D (in.)	Std. Mode	Std. Mode	Net (lb.)
N2090R	3.0 cu. ft., Black Trim	38 45⁄64 x 16 ½ x 19 29⁄32	5.00	2.70	40.50

NORCOLD® REFRIGERATORS

Norcold® has over 60 years of mobile refrigerator knowledge so you can feel confident you selected a refrigerator with the right performance and necessary features.

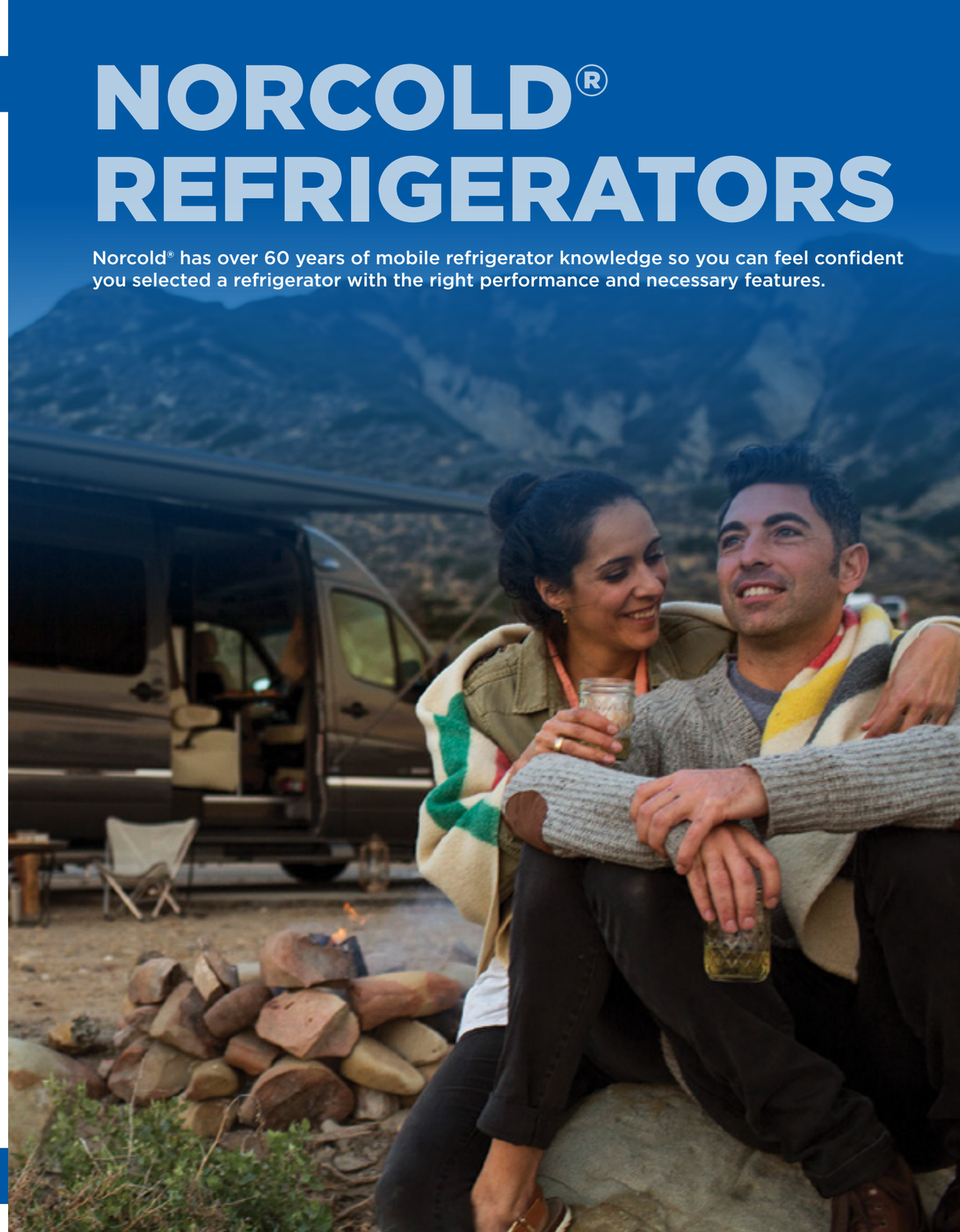

DE105

3.3 cu. ft. DC/DE/EV Combination Refrigerator Freezer

Power Supply Options:

- Direct Current (DC) - 12 or 24-volts
- Dual Electric (DE) - AC 120-volts at 60 hertz & DC 12 or 24-volts
- European Voltage (EV) – AC 230-volts at 50 hertz and DC 12 or 24-volts

Features

- LED interior lighting
- Powder-coated wire shelves with a raised lip to keep food secure while in transit
- Two clear door bin

SKU	Description	Cutout Dimensions	Amp Draw		Weight
		H x W x D (in.)	12V/DC	24V/DC	Net (lb.)
DE105*	3.3 cu. ft., Black Trim	30 x 20 ¾ x 20 ⅛	5.20	2.60	70

*Door panels sold separately. Dimensions can be found on page 53.

N4141

5.0 cu. ft. 3-Way Refrigerator

Power Supply Options:

- Direct Current (DC) - 12-volts
- Alternating Current (AC) - AC 120-volts at 60 hertz
- LP Gas

Features

- Designed for narrow spaces – only 16.5 inches wide
- .5 cu. ft. freezer compartment
- LCD touch screen controls
- Manual or automatic power source selection
- Reversible doors with adjustable or removable door bins

SKU	Description	Cutout Dimensions	Amp Draw		LP Gas	Weight
		H x W x D (in.)	12V/DC	120V/AC		Net (lb.)
N4141*	5.0 cu. ft., Black Trim	59 ³⁄₃₂ x 16 ½ x 22 ¾	17.20	2.50	Yes	85

*Door panels sold separately. Dimensions can be found on page 53.

NR751

2.7 cu. ft. DC/AC/EV Refrigerator

NR740

1.7 cu. ft. DC/AC/EV Refrigerator

Power Supply Options:

- Direct Current (DC) – 12 or 24-volts
- Alternating Current (AC) - 120-volts at 60 hertz
- European Voltage (EV) – 230-volts at 50 hertz
- Refrigerator comes with DC power cord only
- Optional AC power cords available
- See page 31 for power cord options

Features

- European styling with an easy pull handle
- Flush or proud mountable without any additional hardware
- Self-venting through lower grill
- LED interior lighting
- Removable door bins with wire retainers to keep items secure in transit

SKU	Description	Cutout Dimensions	Amp Draw				Weight
		H x W x D (in.)	12V/DC	24V/DC	120V/AC 60Hz	230V/AC 50Hz	Net (lb.)
NR751BB	2.7 cu. ft., Black	20 ½ x 18 ½ x 21 1⁄16 to 23 3⁄16	3.60	1.80	.75	.47	49
NR751SS	2.7 cu. ft., Stainless	20 ½ x 18 ½ x 21 1⁄16 to 23 3⁄16	3.60	1.80	.75	.47	49
NR740BB	1.7 cu. ft., Black	20 ½ x 15 ¼ x 17 ⅞ to 19 15⁄16	3.60	1.80	.75	.47	41
NR740SS	1.7 cu. ft., Stainless	20 ½ x 15 ¼ x 17 ⅞ to 19 15⁄16	3.60	1.80	.75	.47	41

					Current Model Families									Previous Model Families					
					Polar® MAX		Polar®			Norcold®				Norcold®					
Part Number	Description	Height (in.)	Width (in.)	Thickness (in.)	2118	1210	N10	N8	N7	DC558	DE105	DE0061	DE0041	N5XX	N6XX	N8XX	NX6XX	NX8XX	1095
618152	Black Acrylic Door Panel - Lower	38 5⁄8	21 9⁄16	1/8												X			X
618178	Black Acrylic Door Panel - Upper	14 ½	21 9⁄16	1/8											X	X			X
618236	Black Acrylic Door Panel - Lower	31 5⁄8	21 9⁄16	1/8											X				
623866	Kit Upper/Lower Black Acrylic Door Panels	23 5⁄8	17 13⁄16	1/8									X						
623867	Kit Upper/Lower Black Acrylic Door Panels	16 ½ 27 ¼	17 13⁄16 17 13⁄16	1/8								X							
629756	Black Acrylic Door Panel	37	21 9⁄16	1/8						X				X					
629757	Black Acrylic Door Panel - Lower	41 13⁄64	16 13⁄64	1/8		X													
629758	Black Acrylic Door Panel - Upper	18 3⁄8	16 13⁄64	1/8		X													
631900	Black Acrylic Door Panel - Upper	23 1⁄8	17 1⁄4	1/8	X														
631901	Black Acrylic Door Panel - Lower	42 5⁄16	17 1⁄4	1/8	X														
636216	Black Acrylic Door Panel - Upper	15 1⁄16	21 9⁄16	1/8													X	X	
636217	Black Acrylic Door Panel - Lower	32 25⁄32	21 9⁄16	1/8													X		
636218	Black Acrylic Door Panel - Lower	39 25⁄32	21 9⁄16	1/8														X	
639621	Black Acrylic Door Panel - Upper	15 17⁄32	21 19⁄32	1/8			X	X	X										
639622	Black Acrylic Door Panel - Lower	39 5⁄8	21 19⁄32	1/8					X										
639623	Black Acrylic Door Panel - Lower	39 5⁄8	21 19⁄32	1/8			X	X											
640659	Door Panel - Black	28 25⁄64	19 51⁄64	1/64							X								

Vents

Part Number	Description	Current Model Families: Polar® MAX 2118	Polar® MAX 1210	Polar® N10	Polar® N8	Polar® N7	Norcold® N4150	Norcold® N4141	Previous Model Families: Norcold® 322/323	Norcold® N260	Norcold® N180	Norcold® N3XX	Norcold® N4XX	Norcold® N5XX	Norcold® N6XX	Norcold® N8XX	Norcold® NX6XX	Norcold® NX8XX	Norcold® 1095
69110022	Vent Door Assembly - White							X											
69110027	Vent Door Assembly - Black							X											
633588141	Vent - Small Euro - Winnebago White						X	X											
616319BWH	Roof Jack Base - White	X	X	X	X	X	X	X				X	X	X	X	X	X	X	X
620505BK	Small Side Vent - Upper/Lower - Black			X	X	X	X	X	X	X		X	X	X	X	X	X	X	X
620505CHA	Small Side Vent - Upper/Lower - Champagne			X	X	X	X	X	X	X		X	X	X	X	X	X	X	X
620505PW	Small Side Vent - Upper/Lower - Polar White			X	X	X	X	X	X	X		X	X	X	X	X	X	X	X
621156AG	Side Vent - Upper/Lower - Aero Gray - PP		X	X	X	X	X	X					X	X	X	X	X	X	X
621156AG-1	Side Vent - Upper/Lower - Aero Gray - ASA		X	X	X	X	X	X					X	X	X	X	X	X	X
621156BK	Side Vent - Upper/Lower - Black - PP		X	X	X	X							X	X	X	X	X	X	X
621156BK-1	Side Vent - Upper/Lower - Black - ASA		X	X	X	X							X	X	X	X	X	X	X
621156BW	Side Vent - Upper/Lower - Bright White - PP		X	X	X	X	X	X					X	X	X	X	X	X	X
621156CHA	Side Vent - Upper/Lower - Champagne - PP		X	X	X	X	X	X					X	X	X	X	X	X	X
621156CHA-1	Side Vent - Upper/Lower - Champagne - ASA		X	X	X	X	X	X					X	X	X	X	X	X	X
621156FWG	Side Vent - Upper/Lower - Four Winds Grey- ASA		X	X	X	X	X	X					X	X	X	X	X	X	X
621156FWT	Side Vent - Upper/Lower - Four Winds Taupe - ASA		X	X	X	X	X	X					X	X	X	X	X	X	X
621156OYS-1	Side Vent - Upper/Lower - Oyster - ASA		X	X	X	X	X	X					X	X	X	X	X	X	X
621156PW	Side Vent - Upper/Lower - Polar White - PP		X	X	X	X							X	X	X	X	X	X	X
621156PW-1	Side Vent - Upper/Lower - Polar White - ASA		X	X	X	X							X	X	X	X	X	X	X

Vents *(continued)*

Part Number	Description	Current Model Families: Polar® MAX 2118	Polar® MAX 1210	Polar® N10	Polar® N8	Polar® N7	Norcold® N4150	Norcold® N4141	Previous Model Families: Norcold® 322/323	Norcold® N260	Norcold® N180	Norcold® N3XX	Norcold® N4XX	Norcold® N5XX	Norcold® N6XX	Norcold® N8XX	Norcold® NX6XX	Norcold® NX8XX	Norcold® 1095
622293CBK	Roof Jack Cap - Black	X	X	X	X	X	X	X				X	X	X	X	X	X	X	X
622293CBW	Roof Jack Cap - Bright White	X	X	X	X	X	X	X				X	X	X	X	X	X	X	X
625161BBK	Roof Jack Base - Black	X	X	X	X	X	X	X				X	X	X	X	X	X	X	X
637318BK	Large Side Vent - Black	X	X																
637318BW	Large Side Vent - Bright White	X	X																
638406PW	Vent Door Assembly - Polar White										X								

Accessories

Part Number	Description	Current Model Families: Polar® MAX 2118	Polar® MAX 1210	Polar® N10	Polar® N8	Polar® N7	Norcold® NR751	Norcold® NR740	Norcold® NRF - 30/45/60	Previous Model Families: Norcold® N5XX	Norcold® N6XX	Norcold® N8XX	Norcold® NX6XX	Norcold® NX8XX	Norcold® 1095
619020	12V Fan Kit											X	X		
634650	AC Adapter								X						
634913	Kit - Low Ambient (Cold Weather)	X	X							X	X	X	X	X	X
635591	US AC Power Cord - 120V						X	X							
635592	EU AC Power Cord - 230V						X	X							
635593	AUS AC Power Cord - 230V						X	X							
639406	Kit - Panel Adapter - MAGNAstrips			X	X	X							X	X	
639892	12V Fan Retrofit Kit				X	X									
639971	Kit - Low Ambient (Cold Weather)			X	X	X									

THETFORD
NORCOLD

Learn more at thetford.com
Inside Sales: 1.800.354.4135
Email: orders@thetford.com

Specifications subject to change • P/N 39701 Rev. N • 7/23